GENERAL NOTES

These drawings and pe fications nd cop here f re gal natrume t servi fo use the owner

Prof s ional Community Management
Box 2220
agura Hill CA 65
( ) 380-461

and author zed repr sent tive on the de gnated roperty only and rema the sole property he de igns Unauthorized us prohibited

reet addre _____
_____
_____

Bonds Compl t bonds and mat ri l rele se may be required and hall be implemented t he owner di cretion

urance Certain nsurance( ) may be equired outel ned by he owner Should hey request such insuranc the pol i s must be aken out owner name

Guarantee , warrant , t The work ach rad shal be guarantee by contra t r

Cutting, patching, t Each rade hal do hei own cutting patching fitting etc To make several part come together properly fit and rec ive or be recieved by the work of othe rad

Clean-up Al rade shall t all ime keep the premise fre form ccumul tion wast mat rial or rubbish caused by hei work Contra t i response bl for emoval debris and excess mat rial and upon completion eave work a eas broom clean daily

Extra work The owne may orde extr work or make change by lt ring adding deducting from he work the contra t amount beln adjusted ccordingly

Substitut one No sub t tutions shal be made without pri vr en pproval f the owner

Code All work shall comply with current edition of the Unif rm Building Code; tat and ocal codes

General note Each rade shall be held responsible for knowe dge general note i tad herein or sewhere within the drawings

Fees The building permit and plan check fees shal be taken out and paid for by the contra tor/subcontractor responsibl for hat portion of the work

nterpretation Imperative that the contractors verify al dimensions and conditions shown on the drawings t the job and inform the owne any discrepancis conflict or omissions before proceeding with he work

Precedenc Imension have preced t ove scal

Devi tions Any dev tions from drawings neces ted by fi l cond i ns must be ecompan ed by vr an change orde

Manufacturer directions Wher manuf ture d rection /spe f c t ns er called for hey hall be considered part hes drawings

Construction pul t one The drawing and work performed hall at ll ims be governed by the appl cabl prov sions Federal St t and ocal ave

Fa ies Temporary ofl t hal be provided pe ocal author

Barricade Construct on barricade required shall conform he requ ement oc l autho i Fo s fety he publ shal be rot cted and/ and ded from the construction work/ t all ime during the ontra t

20 ructure The tru ture de igned as tabl unit fter component part are lac Therefore contra tor shal provide ll shoring and bracing required insure he tab ty nd/or al part during construction

andards All work shall be performed the be t standard pract ce Damaged work shall be replaced t the contractor expense

Construction mat l Al material shall be standard grade or bett

Add onal drawing The contractor furn sh ny additional drawings and/or ical tion requested by he Orange County Building Department

24 Permit Permit shall be mued for such construct on by C M nc Agent for sure World amma Mill Cal f rni Permit mect on Department An Orange County permit will be required

ROO NG NOTES

Confease ype W1 (yer)	b
Comply type (ayer)	be
Hot mop sphalt (each ly)	90 lbs
Hot mop asphalt (surfac)	60 lb
Grave (/ /)	400 lb
	bs

GRT AND VENTILATION NOTES

The open area the onger wall and one additional wall equal t ea t 6 of he rea below minimum feet inche each wall measured from he floor pa he current edition the U C

GENERAL NOTES

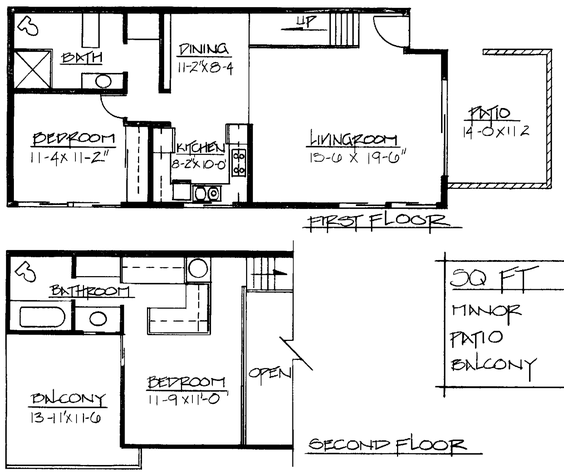

SQ FT	
MANOR	1516 ⊕
PATIO	156 ⊕
BALCONY	164 ⊕

SCALE NONE

FLOOR PLAN

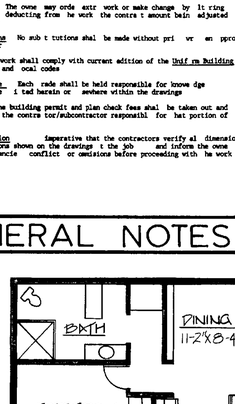

BLDG PLAN

NO1 DF EQUAL OR BETTER

*RAFTERS		
SIZE	SPACING	SPAN
2X4	16 o/c	11-2"
	24 o/c	9-6
2X10	12 o/c	17'-10"
	16 o/c	16 3"
	24 o/c	13-3"
	32 o/c	10-10'
2X8	16 o/c	21'-3
	24 o/c	17'-6"
	32 o/c	14'-3"

*HEADERS	
SIZE	SPAN
4X4	4'
4X6	8'
4X8	11'
4X10	14'
4X12	17'
4X14	20'

NO 2 DF EQUAL OR BETTER

CHARTS

REQUIREMENTS		
TOTAL EQPT (LF)		303 8 ⊕
REQUIRED	LIGHT	30 4 ⊕
	AIR	15 2 ⊕
EXISTING	LIGHT	129 0 ⊕
	AIR	30 0 ⊕

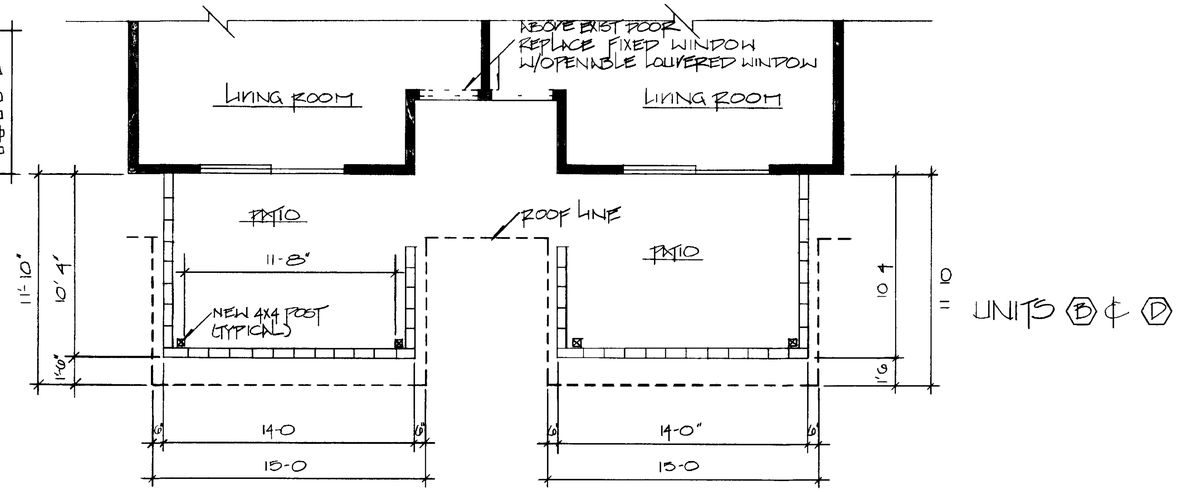

SCALE 1/4 1 0

PATIO PLAN

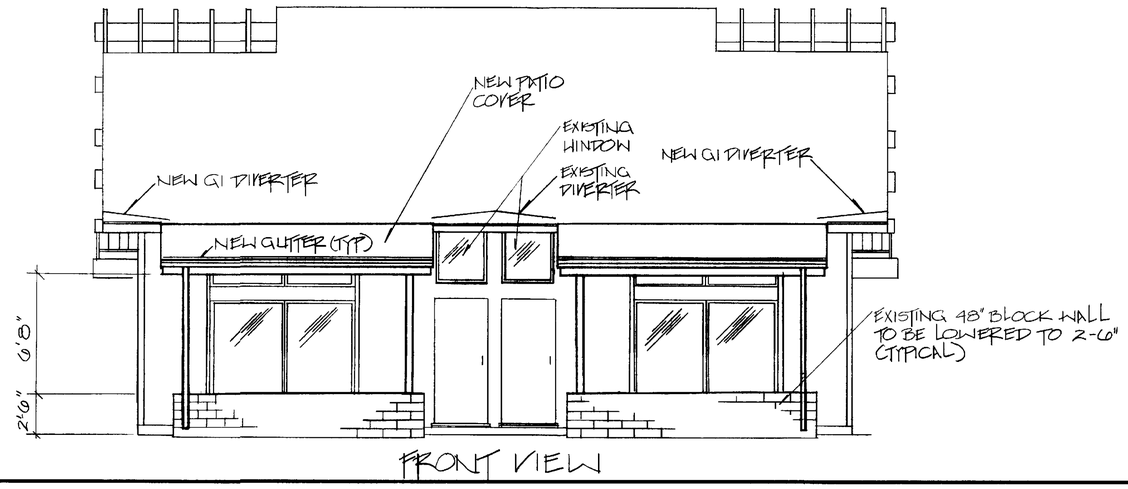

SCALE 1/4 1 0

△ ELEVATION

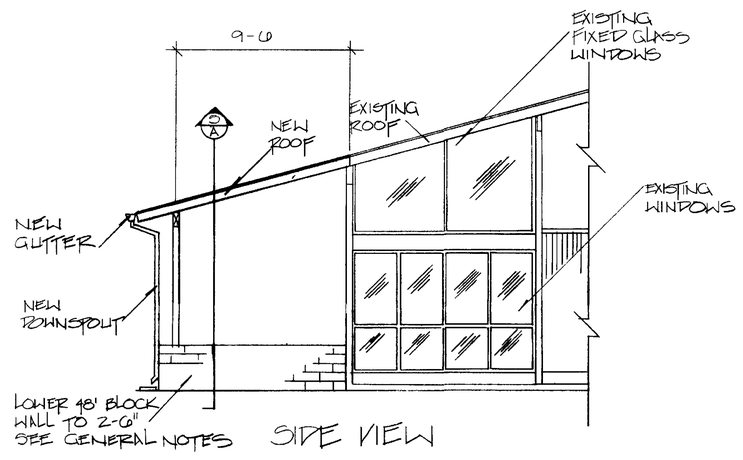

SCALE 1/4 -1 0'

△ ELEVATION

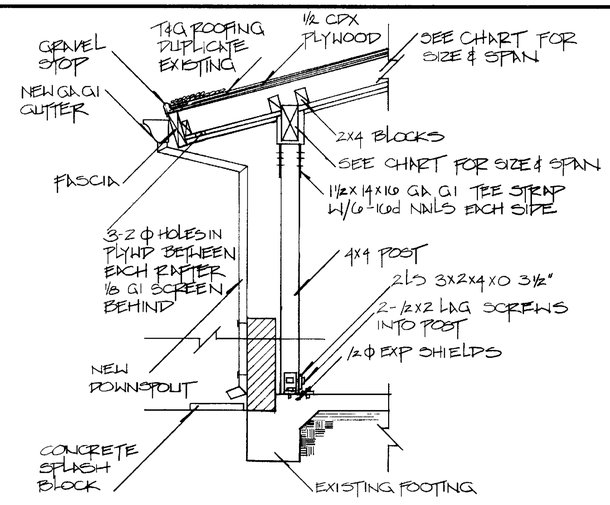

SCALE 3/8 1 0

(A) TYP SECTION

Professional Community Management INC
LE SURE W RL — LAGU N HILLS
PERMITS & INSPECTIONS DEPARTMENT
24 LT A AWAY BL D LAG A LLS CA
P O B 222 LAG A LLS CA 2684 (7 4 38 4 0 0
ARE RE E T L V G APPLAERS C PA Y

CONSTRUCTION PLANS FOR
PATIO COVER BUILT UP
5-PLN

REVISIONS
4/3/92

DRAWN BY G OSWALD
DATE 10/9/90
SCALE AS SHOWN
APPROVED BY

LEISURE WORLD
18
STANDARD PLAN

SHEET 1 of 1